Jack for surface mounting

Part No.: **JH-1**

- A chip mounter can be used for this jack.
- This is used for checking a signal line and power supply line.
- This is adaptive for the plug of ϕ 2.0
  (It can be inserted from the horizontal direction.)
- Plugs of OP-7-1, OP-7-2 and OP-7-2-100 (with electric wire) are available.
- Material Socket part: Body: Phosphor bronze
  Resin part: Fluorine (UL94V-0)
- Finish: Gold plating over nickel base
- Resin color:
  BLACK, RED, YELLOW, GREEN, BLUE, WHITE
- Adaptive male pin diameter: ϕ 2.0
- Insertion forces: 1500g or less
- Removal forces: 100g or over
- Insertion / removal durability : 100 cycles
- Rated current: 5A
- Contact resistance: 10m Ω or less
- Insulation resistance: 1000M Ω or over
- Withstand voltage: 1000V AC, DC per minute
- Operating temperature range: − 55 to + 200℃

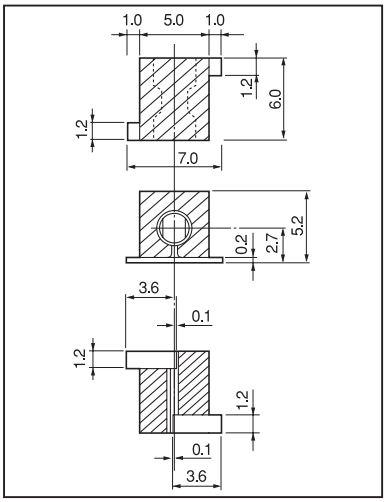

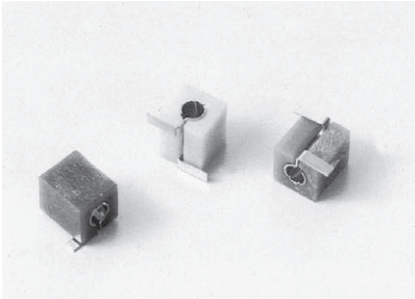

■ Example of usage

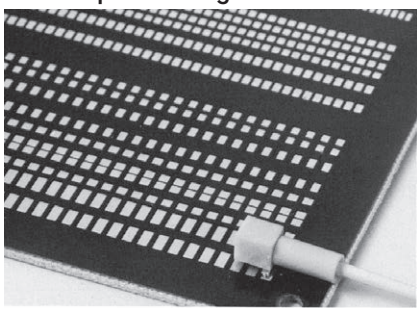

Combination of JH-1 and OP-7-2-100

■ How to order

JH-1-T RED

- RED: Please specify the resin color. (BLACK, RED, YELLOW, GREEN, BLUE or WHITE)
- T: T: Tape-and-reel (200 pcs/reel)
  B: Bulk (10 pcs/pack)

■ Recommended land information

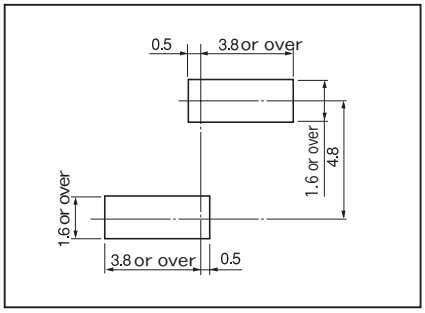

Dimension of the reel

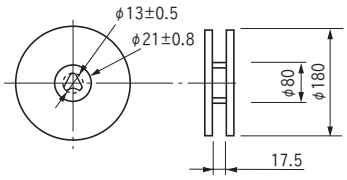
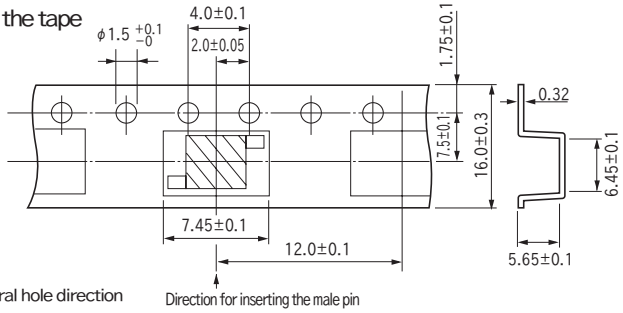
Dimension of the tape